REAR DEFOGGER

Component Index

Dash Fuse Box
Engine or Powertrain Control Module (ECM or PCM)
Fuse/Relay Box
Rear Defogger Relay

REAR DEFOGGER

Circuit Schematic

* = Rodeo Sport

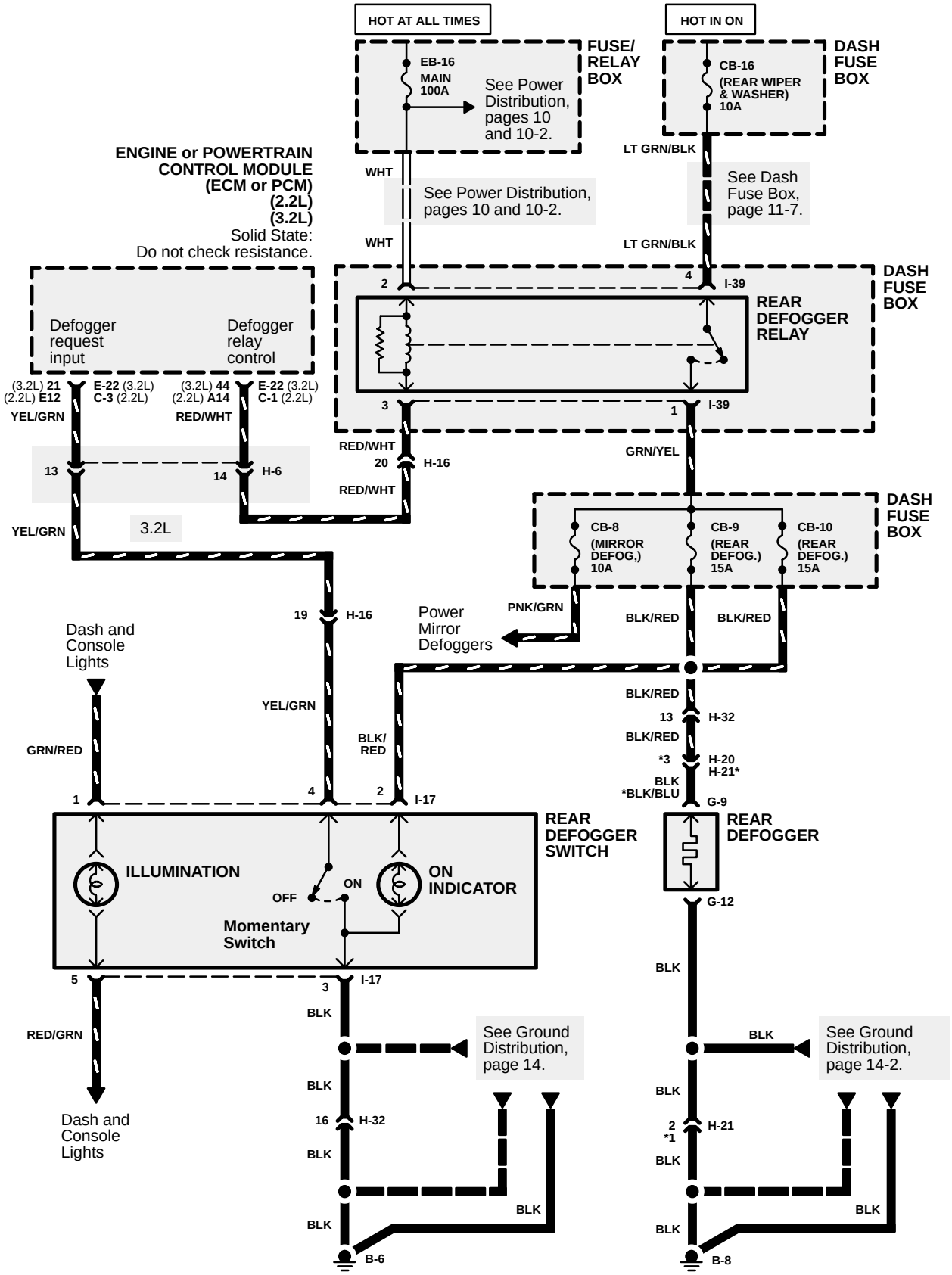

REAR DEFOGGER

Component Location Index

(Refer to Section 201 for photographs.)

Component		Photo No.
Dash Fuse Box	Left side of I/P, behind panel	58
Engine or Powertrain Control Module (ECM or PCM) (2.2L)	Below center of I/P	73
Engine or Powertrain Control Module (ECM or PCM) (3.2L)	Left side of engine compartment	44
Fuse/Relay Box	Right side of engine compartment, on inner fender panel	14
Rear Defogger Relay	Left side of I/P, in dash fuse box	59
Connector		
H-6 (16-BLU)	Left side of engine compartment	27
H-16 (22-BLK)	Behind left kick panel	62
H-20 (1-WHT)	Right side of rear roof panel, behind trim	96
H-21 (2-WHT) (Rodeo)	Left side of rear roof panel, behind trim	97
H-21 (4-WHT) (Rodeo Sport)	Left rear cargo compartment	131
H-32 (16-WHT)	Behind left kick panel	62
Ground		
B6	Below center console	81
B-8	Below center console	81

Circuit Operation

Voltage is applied at all times through the EB-16 MAIN fuse to the rear defogger relay coil. With the starter switch in ON, voltage is applied through the CB-16 REAR WIPER & WASHER fuse to the rear defogger relay contacts.

When you push the rear defogger switch to the ON position, battery voltage is applied from the CB-8 (MIRROR DEFOG.) fuse to the left and right power mirror defoggers. The power mirror defogger heats up to remove any fog from the mirrors.

When the rear window defogger switch is depressed, the ECM or PCM receives a ground input from the switch and, in turn, the ECM or PCM provides ground to the coils of the rear window defogger relay. The contacts close, applying ignition voltage to the rear window defogger, rear window defogger indicator light (through the CB-9 and CB-10 REAR DEFOG. fuses), and the left and right power mirror defoggers (through the CB-8 MIRROR DEFOG. fuse). The ECM or PCM acts as the timer for the rear window defogger relay and keeps the contacts closed, maintaining the operation of the rear window defogger, left and right mirror defoggers and indicator light for 10 minutes or until the ignition is turned to “ACC” or “OFF”, or the rear window defogger switch is depressed again. The rear window and mirrors heat to remove any fog from the glass and the indicator stays on to remind the driver that it is in use.